DS-2DF8242IX-AELW (T3)
2 MP 42 × Network IR Speed Dome

Hikvision DS-2DF8242IX-AELW (T3) 2 MP 42 × Network IR Speed Dome adopts 1/1.8" progressive scan CMOS chip. With the 42 × optical zoom lens, the camera offers more details over expansive areas.

This series of cameras can be widely used for wide ranges of high-definition, such as the rivers, forests, roads, railways, airports, ports, squares, parks, scenic spots, stations and large venues, etc.

- 1/1.8" Progressive Scan CMOS
- Up to 1920 × 1080 resolution
- Min. Illumination: Color: 0.002 Lux @(F1.2, AGC ON),B/W: 0.0002 Lux @(F1.2, AGC ON),0 Lux with IR
- 42 × optical zoom, 16 × digital zoom
- 140dB WDR, 3D DNR, HLC, Smart IR
- 24 VAC & Hi-PoE
- Up to 400 m IR distance
- Support H.265+/H.265 video compression
- Support vandal-proof alarm
- Support face capture to detect, track, capture, grade, and select face in motion
- Support road traffic to detect vehicles, including license plate number, vehicle model, and vehicle color
- Support Rapid focus
- IP67

▪ Specification

Camera Module	
Image Sensor	1/1.8” progressive scan CMOS
Min. Illumination	Color: 0.002 Lux @ (F1.2, AGC ON) B/W: 0.0002 Lux @ (F1.2, AGC ON),0 Lux with IR
Shutter Speed	1/1s to 1/30,000s
Focus	semi-auto, manual, auto
Day & Night	ICR
BLC	yes
WDR	140 dB WDR
HLC	yes
3D DNR	yes
EIS	Yes. Built-in gyroscope to improve EIS performance.
Regional Exposure	yes
Regional Focus	yes
Digital Zoom	16 ×
Optical Zoom	42 ×
Privacy Mask	up to 24 masks, polygon region, mosaic mask, mask color configurable
General Function	mirror, password protection, watermark, IP address filter
Optical Defog	yes
Lens	
Focal Length	6.0 mm to 252 mm, 42 × Optical
Zoom Speed	approx. 4.5 s
FOV	Horizontal field of view: 56.6° to 1.7° (wide-tele), Vertical field of view: 33.7° to 0.9° (wide-tele), Diagonal field of view: 63.4° to 1.9° (wide-tele)
Aperture	F1.2 to F4.6
PTZ	
Movement Range (Pan)	360°
Movement Range (Tilt)	-20° to 90° (auto flip)
Pan Speed	pan speed: configurable from 0.1° to 210°/s; preset speed: 280°/s
Tilt Speed	tilt speed: configurable from 0.1° to 150°/s, preset speed 250°/s
Proportional Zoom	yes
Presets	300
Patrol Scan	8 patrols, up to 32 presets for each patrol
Pattern Scan	4 pattern scans, record time over 10 minutes for each scan
Power-off Memory	yes
Park Action	preset, pattern scan, patrol scan, auto scan, tilt scan, random scan, frame scan, panorama scan
3D Positioning	yes
PTZ Status Display	yes
Preset Freezing	yes
Scheduled Task	preset, pattern scan, patrol scan, auto scan, tilt scan, random scan, frame scan, panorama scan, dome reboot, dome adjust, aux output
Video	
Max. Resolution	1920 × 1080
Main Stream	50Hz: 25fps (1920 × 1080, 1280 × 960, 1280 × 720) 60Hz: 30 fps (1920 × 1080, 1280 × 960, 1280 × 720)
Sub-Stream	50Hz: 25fps (704 × 576, 640 × 480, 352 × 288) 60Hz: 30fps (704 × 480, 640 × 480, 352 × 240)
Third Stream	50Hz: 25fps (1920 × 1080, 1280 × 960, 1280 × 720, 704 × 576, 640 × 480, 352 × 288) 60Hz: 30fps (1920 × 1080, 1280 × 960, 1280 × 720, 704 × 480, 640 × 480, 352 × 240)
Video Compression	H.265, H.264, MJPEG
H.264 Type	baseline profile, main profile, high profile
H.265 Type	main profile
H.264+	yes
H.265+	yes
SVC	yes
ROI	dynamic face tracking, fixed region, dynamic license plate tracking
Audio	
Audio Compression	G.711alaw, G.711ulaw, G.722.1, G.726, MP2L2, PCM

Audio Bit rate	64 Kbps (G.711)/16 Kbps (G.722.1)/16 Kbps (G.726)/32 Kbps to 192 Kbps(MP2L2)
Smart Features	
Face Capture	Support detecting up to 30 faces at the same time. Support detecting, tracking, capturing, grading, selecting of face in motion, and output the best face picture of the face.
Road Traffic	Support vehicle detection (license plate number, vehicle model, and vehicle color recognition)
Basic Event	motion detection, video tampering alarm, alarm input and output
Smart Event	unattended baggage detection, object removal detection, intrusion detection, line crossing detection, region entrance detection, region exiting detection, audio exception detection
Smart Tracking	manual tracking, event tracking, auto-tracking
Smart Record	ANR, Dual-VCA
Alarm Linkage	Alarm actions, such as Preset, Patrol Scan, Pattern Scan, Memory Card Video Record, Trigger Recording, Notify Surveillance Center, Upload to FTP/Memory Card/NAS, Send Email, etc.
Vandal-proof Alarm	Yes
Perimeter Protection	Line crossing, intrusion, region entrance, region exiting Support alarm triggering by specified target types (human and vehicle)
Network	
Protocols	IPv4/IPv6, HTTP, HTTPS, 802.1x, Qos, FTP, SMTP, UPnP, SNMP, DNS, DDNS, NTP, RTSP, RTCP, RTP, TCP/IP, DHCP, PPPoE, UDP, IGMP, ICMP, Bonjour
API	ISAPI, Hikvision SDK,ONVIF (Profile S, Profile G, Profile T)
Simultaneous Live View	Up to 20 channels
User/Host	Up to 32 users. 3 levels: Administrator, Operator and User
Security Measures	User authentication (ID and PW), Host authentication (MAC address); HTTPS encryption; IEEE 802.1x port-based network access control; IP address filtering
Client	iVMS-4200, Hik-Connect, HikCentral
Web Browser	IE 8 to 11, Chrome 31.0+, Firefox 30.0+, Safari 11+
Interface	
Communication Interface	1 RJ45 10 M/100 M Ethernet Interface; Hi-PoE
On-board Storage	Built-in memory card slot, support Micro SD/Micro SDHC/Micro SDXC, up to 256 GB; NAS (NFS, SMB/ CIFS), ANR
Alarm Input	7 alarm inputs
Alarm Output	2 alarm outputs
Audio Input	1 audio input, 2.0 to 2.4Vp-p, 1k Ohm±10%
Audio Output	1 audio output, line level, impedance: 600 Ω
Video Output	1.0V[p-p]/75Ω,PAL,NTSC,BNC connector
RS-485	HIKVISION, Pelco-P, Pelco-D, self-adaptive
Supplement Light	
IR Distance	400 m
Smart IR	yes
General	
Power	24 VAC (Max. 60 W, including max. 18 W for IR and max. 6 W for heater), Hi-PoE (Max. 50 W, including max. 18 W for IR and max. 6 W for heater)
Operating Conditions	Temperature: -40°C to 70°C (-40°F to 158°F), Humidity: ≤ 95%
Wiper	yes
Dimensions	Φ 266.6 mm × 410 mm (Φ 10.50" × 16.14")
Weight	Approx. 8 kg (17.64 lb)
Web Client Language	32 languages: English, Russian, Estonian, Bulgarian, Hungarian, Greek, German, Italian, Czech, Slovak, French, Polish, Dutch, Portuguese, Spanish, Romanian, Danish, Swedish, Norwegian, Finnish, Croatian, Slovenian, Serbian, Turkish, Korean, Traditional Chinese, Thai, Vietnamese, Japanese, Latvian, Lithuanian, Portuguese (Brazil)
Approval	
Protection	Lightning Protection, Surge Protection and Voltage Transient Protection,±6kV Line to Gnd, ±3kV Line to Line, IEC61000-4-5, IP67 Standard

DORI

The DORI (detect, observe, recognize, identify) distance gives the general idea of the camera ability to distinguish persons or objects within its field of view.

It is calculated based on the camera sensor specification and the criteria given by EN 62676-4: 2015.

DORI	Detect	Observe	Recognize	Identify
Definition	25 px/m	63 px/m	125 px/m	250 px/m
Distance (Tele)	3475.9 m (11403.9 ft)	1379.3 m (4525.3 ft)	695.2 m (2280.8 ft)	347.6 m (1140.4 ft)

▪ Typical Application

Hikvision products are classified into three levels according to their anti-corrosion performance. Refer to the following description to choose for your using environment.

This model has NO SPECIFIC PROTECTION.

Level	Description
Top-level protection	Hikvision products at this level are equipped for use in areas where professional anti-corrosion protection is a must. Typical application scenarios include coastlines, docks, chemical plants, and more.
Moderate protection	Hikvision products at this level are equipped for use in areas with moderate anti-corrosion demands. Typical application scenarios include coastal areas about 2 kilometers (1.24 miles) away from coastlines, as well as areas affected by acid rain.
No specific protection	Hikvision products at this level are equipped for use in areas where no specific anti-corrosion protection is needed.

Dimension

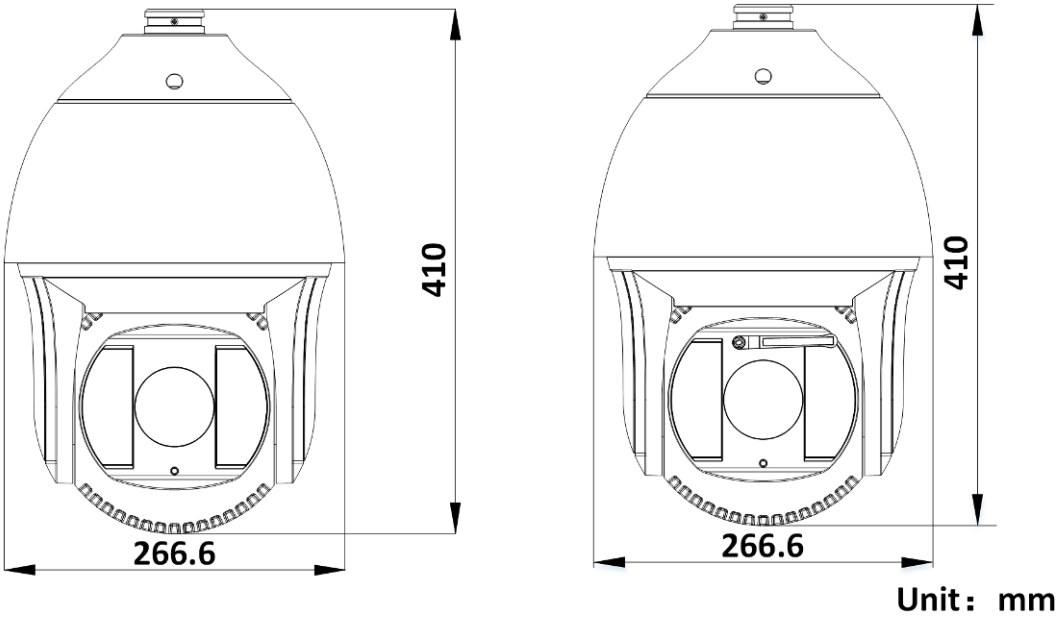

▪ Accessory

Included:

Installation Adapter

Optional:

DS-1604ZJ

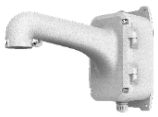

DS-1604ZJ-box

DS-1604ZJ-box-pole

DS-1604ZJ-box-corner

DS-1660ZJ

DS-1619ZJ

DS-1661ZJ

DS-1662ZJ

DS-1663ZJ

DS-1667ZJ

DS-1602ZJ

DS-1604ZJ-Corner

DS-1604ZJ-Pole

TEAC-66-243000V (EU)
MKAC-66-243000U (USA)
TEAC-66-243000VB (UK)
Power adapter

LAS60-57CN-RJ45
Hi-PoE Midspan

▪ Available Model

DS-2DF8242IX-AELW (T3)

Distributed by

Headquarters
No.555 Qianmo Road, Binjiang District,
Hangzhou 310051, China
T +86-571-8807-5998
overseasbusiness@hikvision.com

Hikvision USA
T +1-909-895-0400
sales.usa@hikvision.com

Hikvision Europe
T +31-23-5542770
sales.eu@hikvision.com

Hikvision UK & Ireland
T +01628-902140
sales.uk@hikvision.com

Hikvision UAE
T +971-4-4432090
salesme@hikvision.com

Hikvision Russia
T +7-495-669-67-99
saleru@hikvision.com

Hikvision Australia
T +61-2-8599-4233
salesau@hikvision.com

Hikvision Italy
T +39-0438-6902
info.it@hikvision.com

Hikvision South Africa
Tel: +27 (10) 0351172
sale.africa@hikvision.com

Hikvision Singapore
T +65-6684-4718
sg@hikvision.com

Hikvision Korea
T +82-(0)31-731-8817
sales.korea@hikvision.com

Hikvision India
T +91-22-28469900
sales@pramahikvision.com

Hikvision Brazil
T +55 11 3318-0050
Latam.support@hikvision.com

Hikvision France
T +33(0)1-85-330-450
info.fr@hikvision.com

Hikvision Spain
T +34-91-737-16-55
info.es@hikvision.com

Hikvision Poland
T +48-22-460-01-50
info.pl@hikvision.com

Hikvision Canada
T +1-866-200-6690
sales.canada@hikvision.com

Hikvision Turkey
T +90 (216)521 7070- 7074
sales.tr@hikvision.com

Hikvision Kazakhstan
T +7-727-9730667
nikia.panfilov@hikvision.ru

Hikvision Tashkent
T +99-87-1238-9438
uzb@hikvision.ru

Hikvision Indonesia
T +62-21-2933759
Sales.Indonesia@hikvision.com

Hikvision Thailand
T +662-275-9949
sales.thailand@hikvision.com

Hikvision Malaysia
T +601-7652-2413
sales.my@hikvision.com

Hikvision Vietnam
T +84-974270888
sales.vt@hikvision.com

Hikvision Hong Kong
T +852-2151-1761
info.hk@hikvision.com

Hikvision Colombia
sales.colombia@hikvision.com

© Hikvision Digital Technology Co., Ltd. 2020 | Data subject to change without notice |

05054020211208