DS-1697ZJ-Y

Wall Mount

Feature

- Anti-corrosion design for adverse environments
- The safety rope enables convenient installation

Dimension

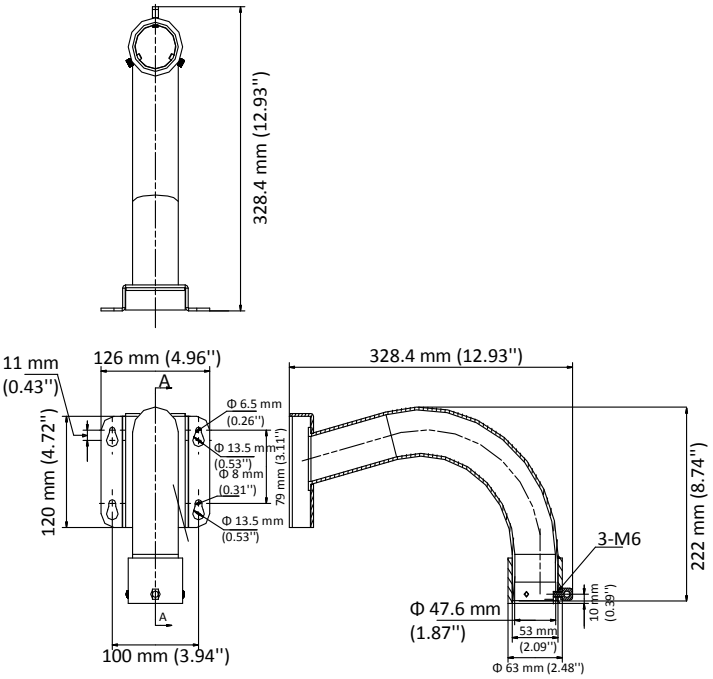

Available Model

DS-1697ZJ-Y

Parameter

Model / Parameters	DS-1697ZJ-Y
	Wall Mount
Appearance	Silver
Material	SUS316L
Dimension	126 mm × 222 mm × 328 mm (4.96" × 8.74" × 12.93")
Weight	Approx. 2307 g (5.09 lb.)

Note

- The mount should be installed on a flat surface.
- Waterproof rubber is necessary for the outdoor application.
- The wall should be capable of supporting at least 3 times as much as the total weight of the camera, and the mount.
- The maximum load capacity of the mount is 8 kg (17.64 lb.).